The DUNE Multi-purpose detector (MPD)

DUNE Near Detector discussion meeting-- TIFR

Fermilab
50 Years of Discovery

Alan Bross
February 27th, 2020

DUNE

Multi-purpose detector (MPD)

Design Status

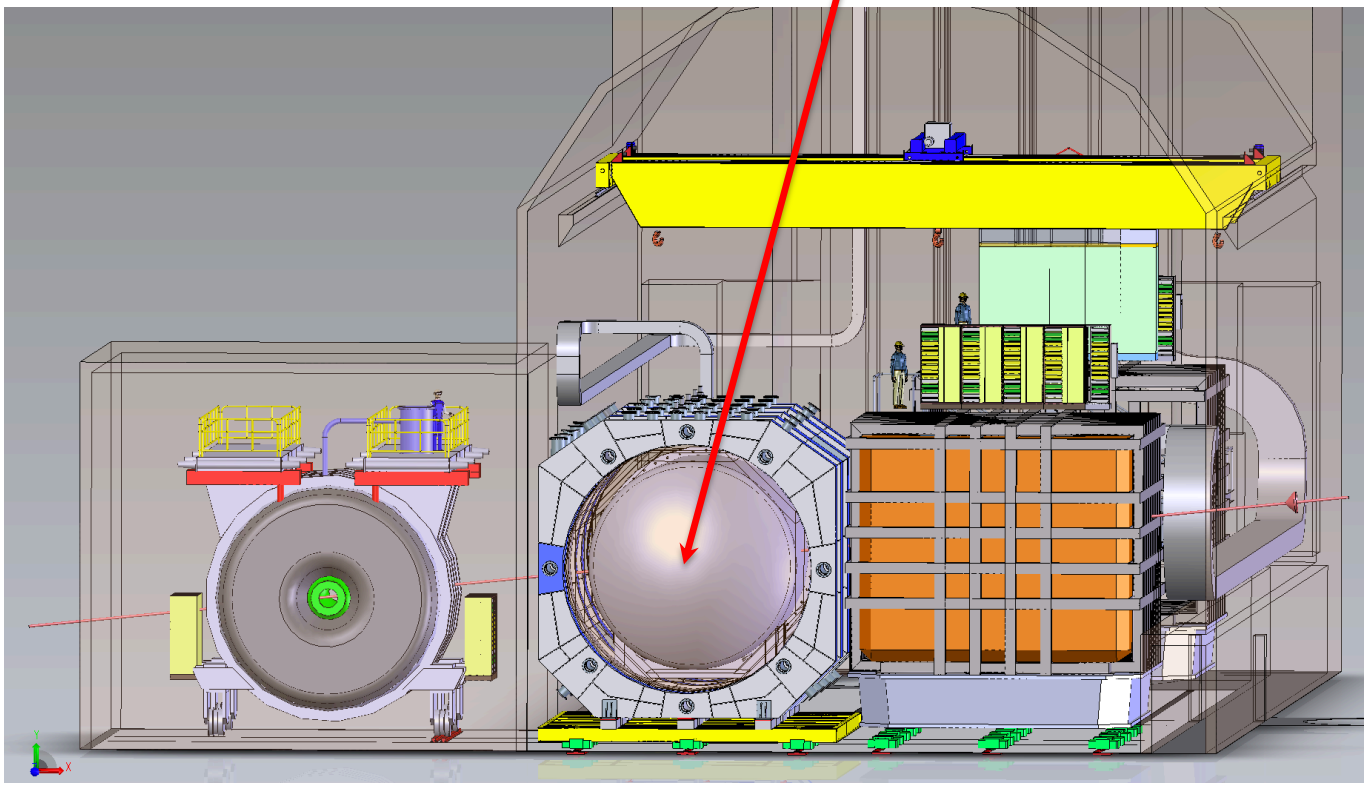

MPD components

- Magnetized high-pressure (10 atm) gaseous argon TPC + ECAL + muon tagger
  - Copy of ALICE TPC (5m in diameter X 5m long active)
  - 0.5T field
- HPgTPC surrounded by high-performance ECAL
  - Calorimetric analysis for neutrals
  - Optimization study underway
- Muon tagger
  - Incorporated into return Fe

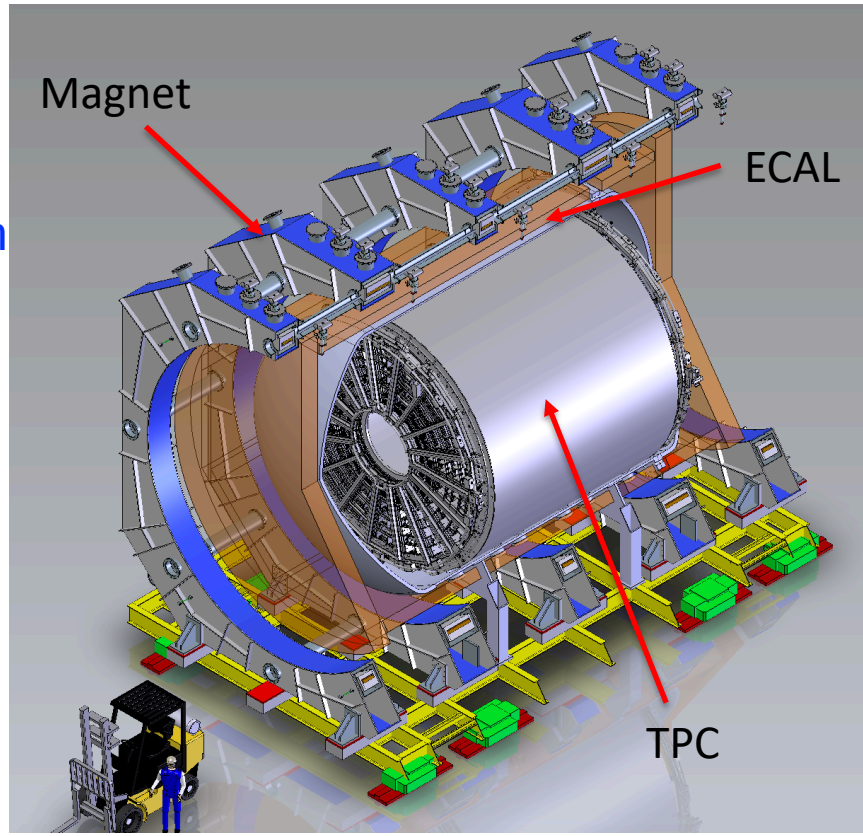

Overarching ND Requirements & MPD

O0: Predict the neutrino spectrum at the FD: The Near Detector (ND) must measure neutrino events as a function of flavor and neutrino energy. This allows for neutrino cross-section measurements to be made and constrains the beam model and the extrapolation of neutrino energy event spectra from the ND to the FD.

O0.1	**Measure interactions on argon**	Measure neutrino interactions on argon, determine the neutrino flavor, and measure the full kinematic range of the interactions that will be seen at the FD.
O0.2	**Measure the neutrino energy**	Reconstruct the neutrino energy in CC events and control for any biases in energy scale or resolution.
O0.3	**Constrain the xsec model**	Measure neutrino cross-sections in order to constrain the cross section model used in the oscillation analysis.
O0.4	**Measure neutrino flux**	Measure neutrino fluxes as a function of flavor and neutrino energy.
O0.5	**Obtain data with different neutrino fluxes**	Measure neutrino interactions in different beam fluxes in order to disentangle flux and cross sections and verify the beam model. **(PRISM)**
O0.6	**Monitor the neutrino beam**	Monitor the neutrino beam energy spectrum with sufficient statistics to be sensitive to intentional or accidental changes in the beam on short timescales.

MPD contributes

MPD requirements

- Measure particles that leave the LAr ND component and enter the MPD
- Constrain neutrino-nucleus interaction systematic uncertainties
- Precisely measure all-components of the neutrino flux
  - ν_μ, ν_μ-bar, ν_e, ν_e-bar
- Reconstruct neutrino energy via spectrometry and calorimetry
- Constrain LArTPC detector response and selection efficiency
- Measure energetic neutrons from ν–Ar interactions via time-of-flight with the ECAL *(Desired)*

MPD essential characteristics

	Essential Characteristics	Primary function	Select physics aims
ND-GAr	GArTPC		
	Magnetic field	Experimental control for the LArTPCs	$\nu_\mu(\overline{\nu}_\mu)$ CC
	Target nucleus Ar	Momentum analyze liquid Ar μ	ν_e CC, $\overline{\nu}_e$
	Low density	Measure exclusive final states with low momentum threshold	Interaction model

MPD's characteristics II

- Downstream muon spectrometer for LAr detector with HPgTPC
  - Large acceptance
  - Minimizes material between LAr/HPgTPC
- Observe ν-Ar events with:
  - Fully hermetic with 4π coverage
  - Sign-selection, magnetic spectrometry
  - Very low tracking thresholds
  - Minimal secondary interactions
    - Disentangle ν-Ar from secondary interactions in the detector
- Powerful tool in transferring ND measurements to FD
- Opens new opportunities to study physics beyond the νSM

Event rates in HPgTPC

FHC

Event Class	#evts per year
ν_μCC	1.5×10^6
ν_μCC-bar	5×10^4
ν_eCC	2×10^4
ν_eCC-bar	5×10^3

Status

High-Pressure gas TPC (HPgTPC)

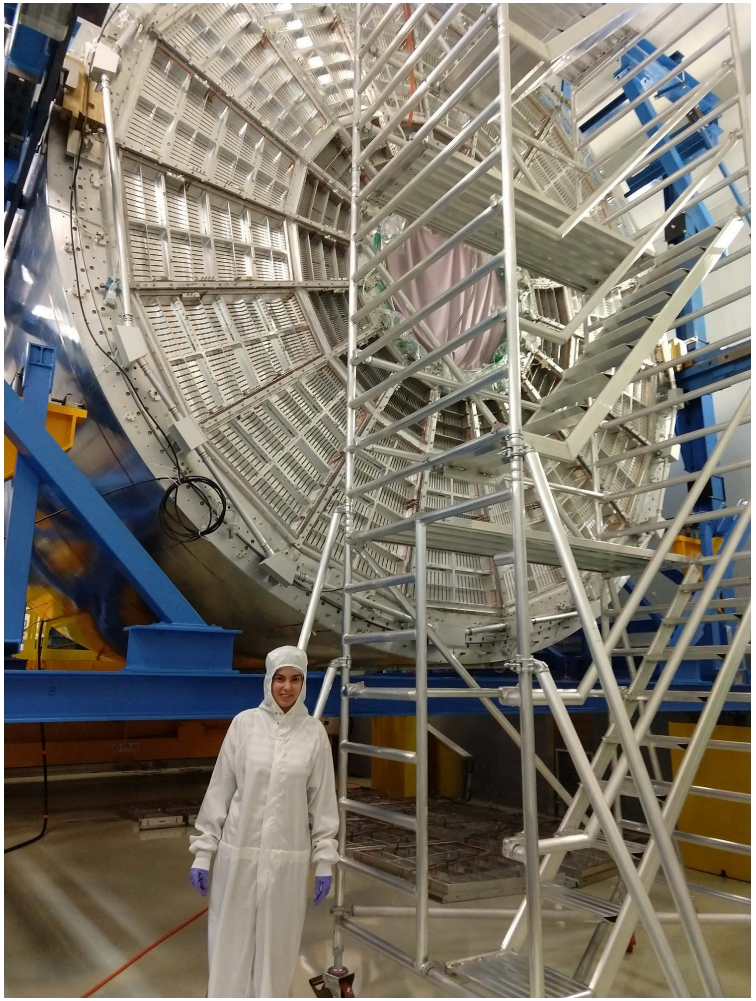

Build copy of ALICE TPC reusing their wire chambers

Well established technology
Vetted detector design

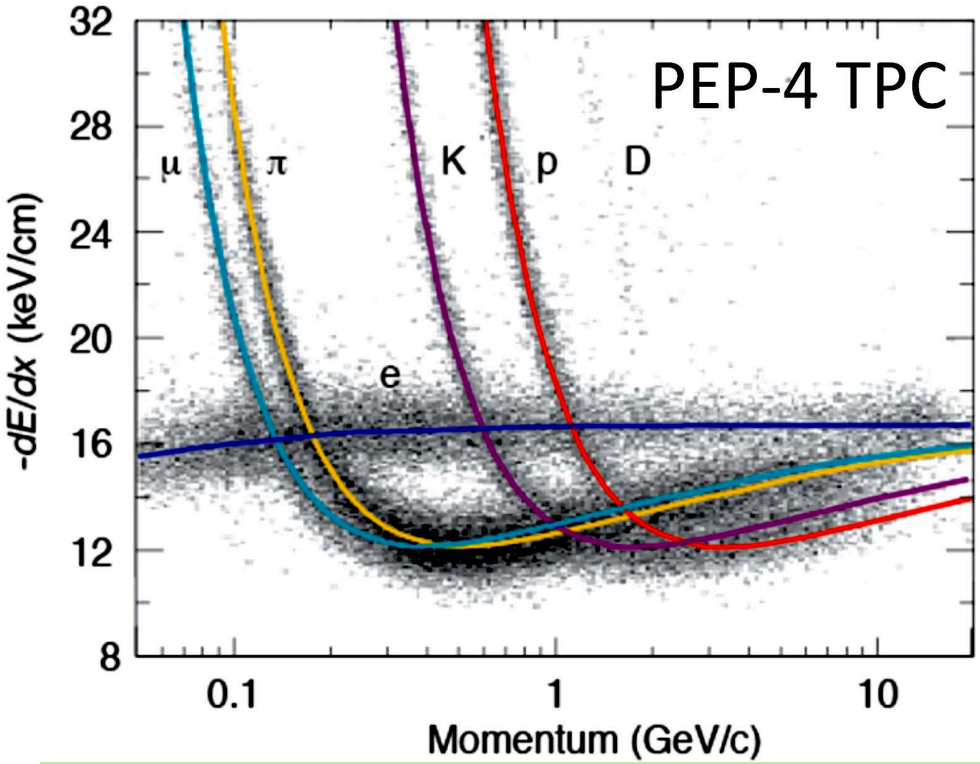

We expect ~ 2% dE/dx resolution based on PEP4
ALICE obtains 5-6%

MPD – High-pressure gas TPC (HPgTPC)

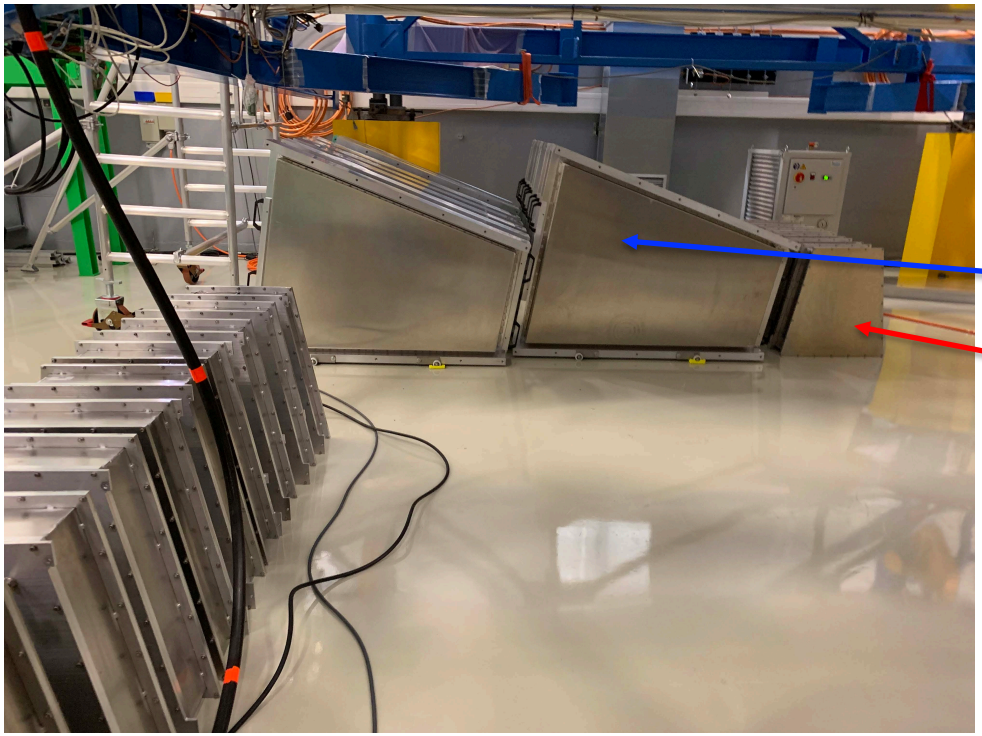

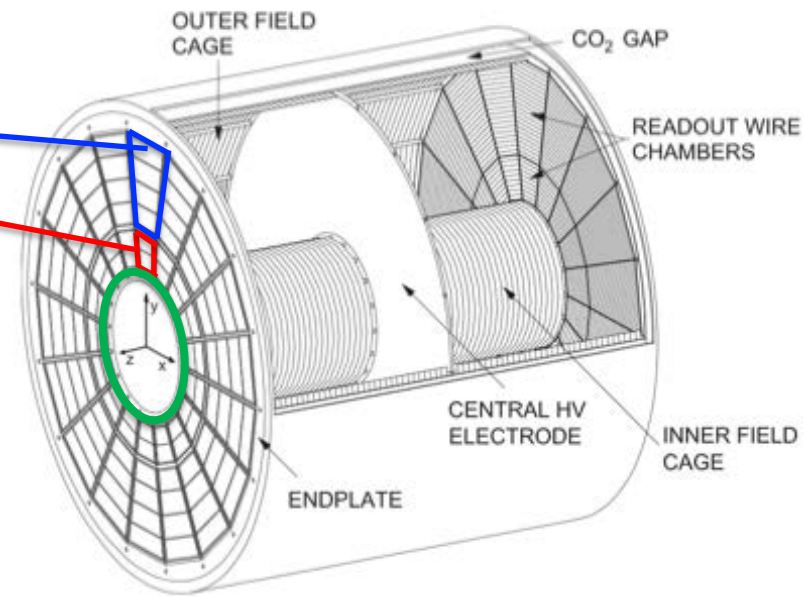

This summer, DUNE team acquired all 36 inner readout chambers & all 36 outer readout chambers

New Central Readout chambers (2) need to be designed and built

MPD Unique Capabilities

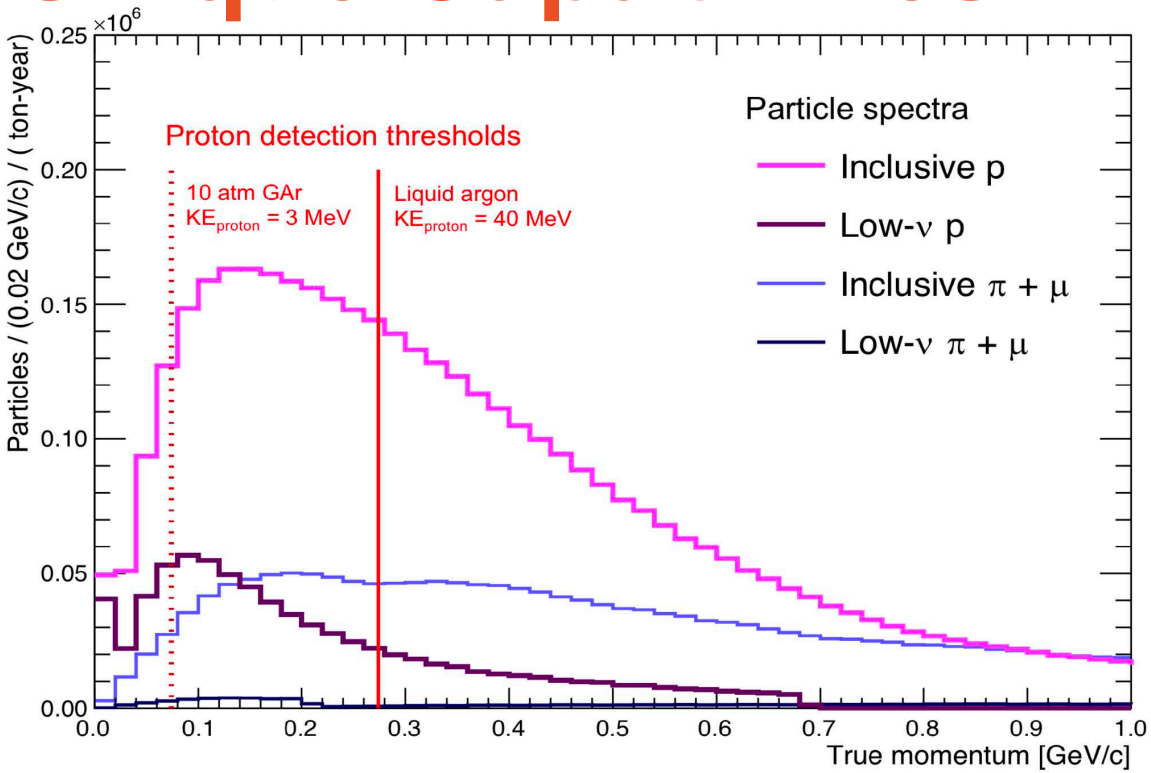

Tanaz Mohayai

- An independent Ar-based magnetized tracker:
  - Lower detector threshold than in LAr, achieved with machine-learning approach
  - Places a better constraint on neutrino interaction modeling uncertainty at low energies in both LAr near detector and far detector

HPgTPC test stands

- Two now in existence
  - IROC at Fermilab is operational
  - OROC at Royal Holloway University of London nearing operational status. Ambition is to bring to Fermilab to be part of ProtoDUNE-ND

IROC

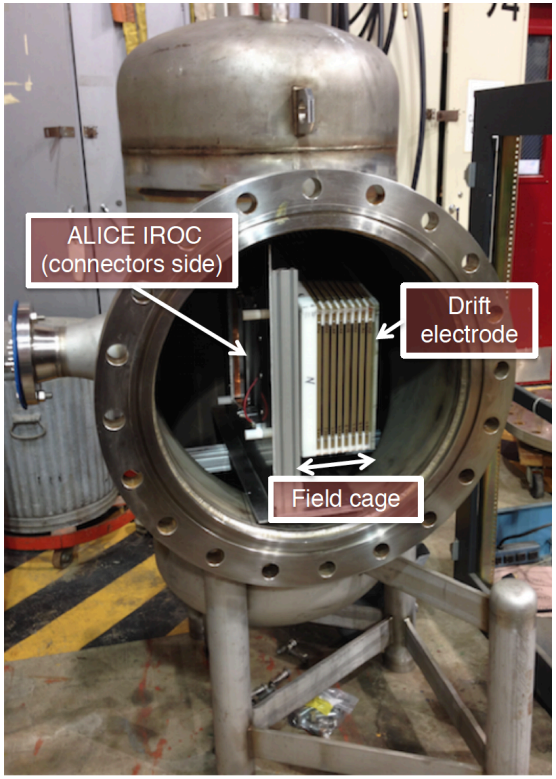

OROC

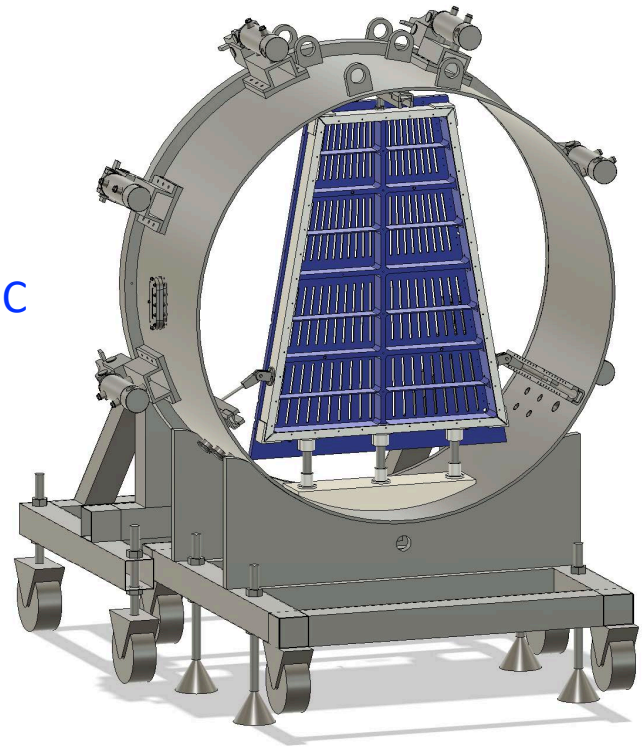

Pressure Vessel

- Bhabha Atomic Research Centre (BARC), Mumbai, is tasked with the pressure vessel design
- The design is now quite mature (You will hear much more in the next talk)
  - Using Al alloy reached thickness of ~ $0.4X_0$

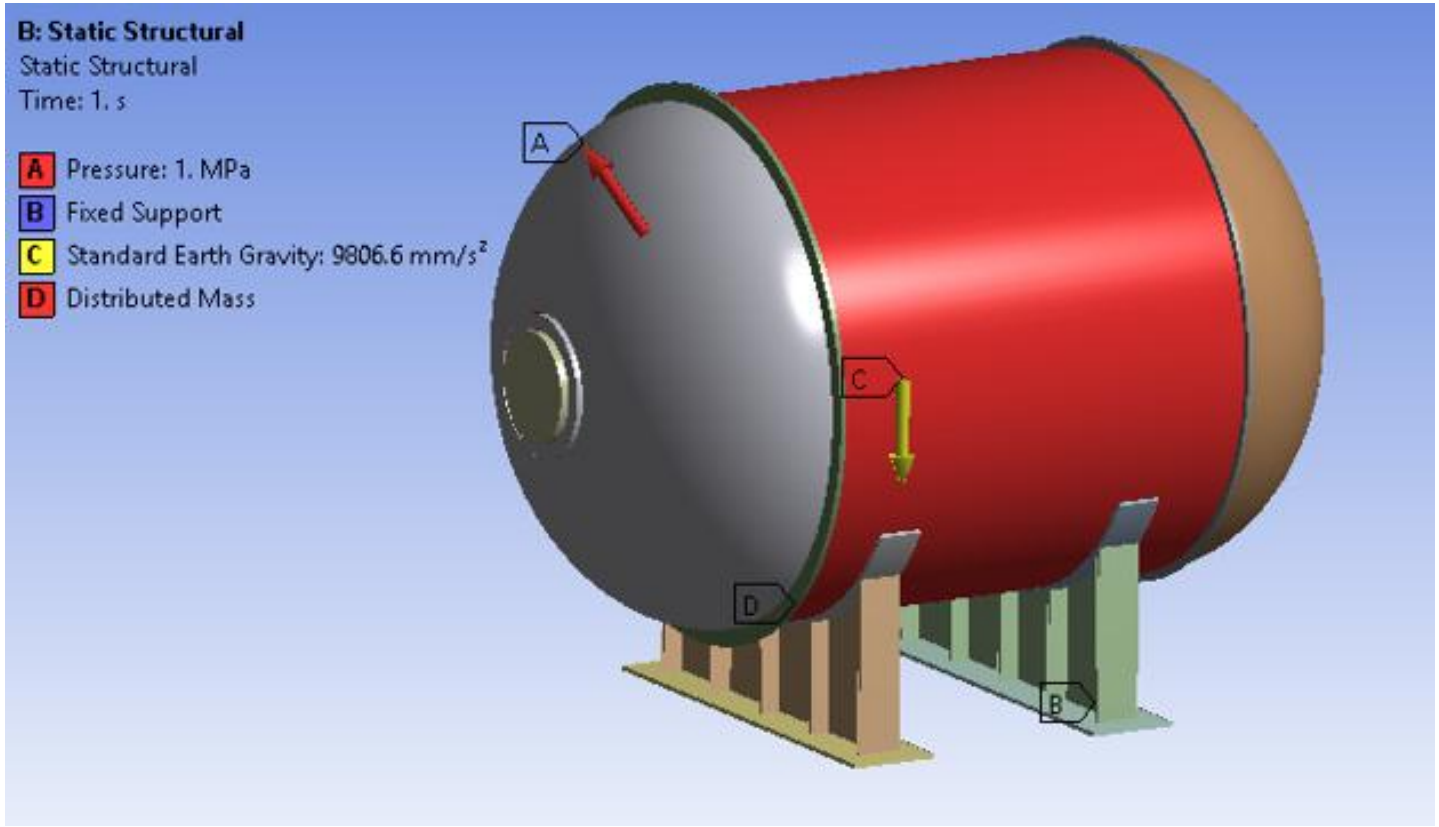

ECAL Baseline Design

- Octagonal geometry
  - Small side length ~2.3m, Large side length ~2.6m, Width ~1.5m
  - Total surface ~ 120 m2 at inner face
  - Total weight ~ 200t (Barrel) + ~95t (Endcap)
- Layers
  - 8 High granularity layers with tiles of 2.5x2.5x5 cm^3 with SiPM
  - 52 Low granularity layers with strips c 4 cm width readout on both sides
- Based on simulation studies
  - Energy resolution ~ 5-6%/Sqrt(E)
  - Angular resolution ~ 6.4 deg/Sqrt(E)
  - Neutron detection eff. ~ 40%

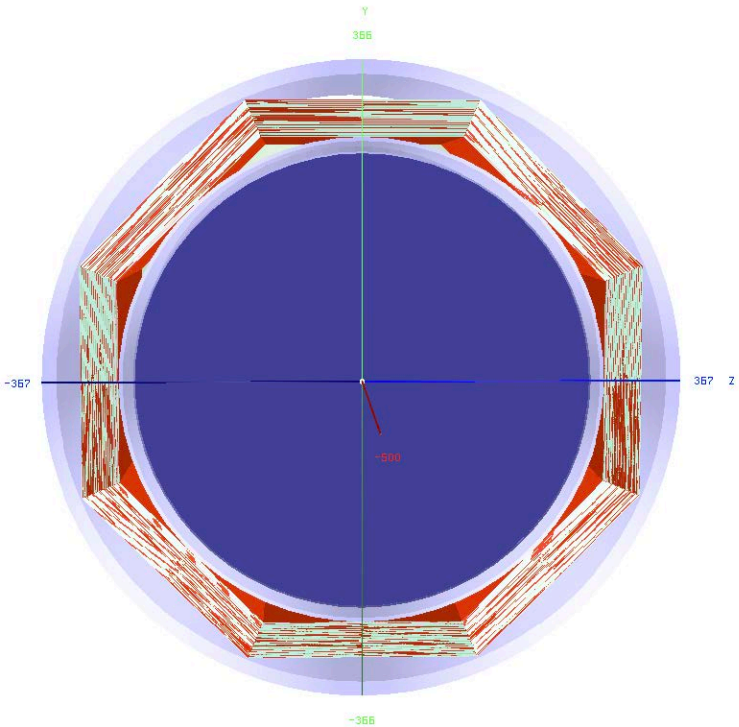

ECAL II

- Detailed discussion on the ECAL at the DESY WS
  - CALICE has been working hard on developing high granular calorimeters
    - No show-stopper in terms of technology
    - Well under control in CALICE (SiPM technology, plastic, light yield, uniformity, mass-production, QA)
    - Fast-timing (~< ns) will need more work
    - Recent AHCAL prototype (22k channels) using
  - 3x3x3cm3 cells
    - CMS is building part of the HGCAL based on this technology
    - All ingredients are technically in place

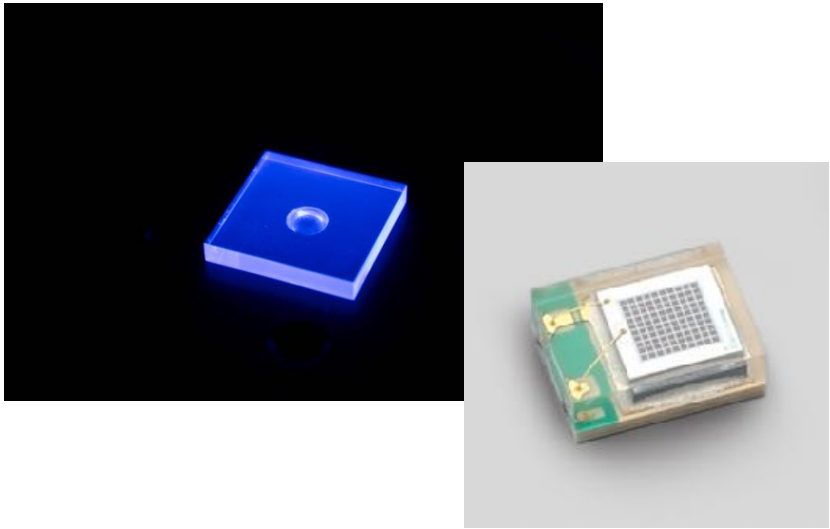

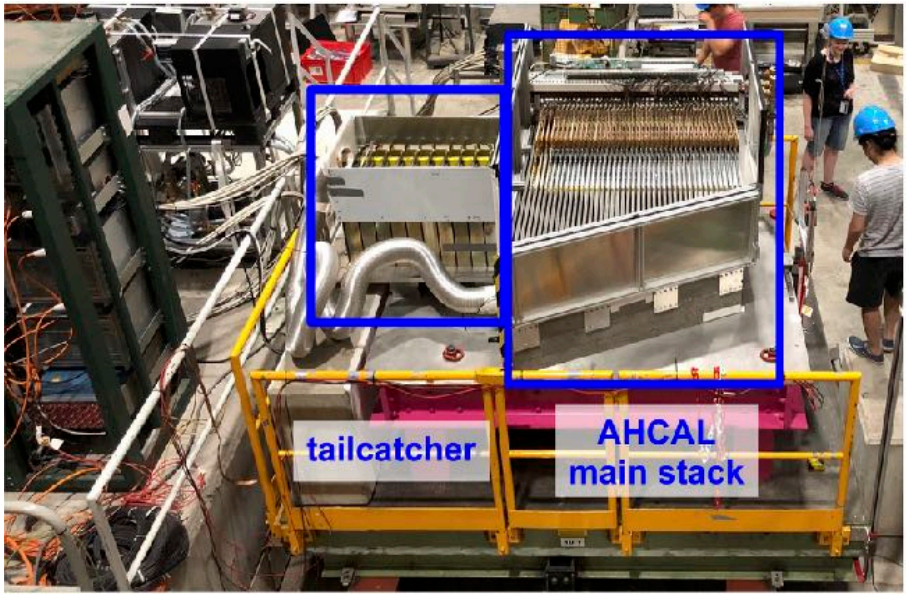

Magnet: Superconducting 3-coil Helmholtz with superconducting bucking coils

Vladimir Kashikhin

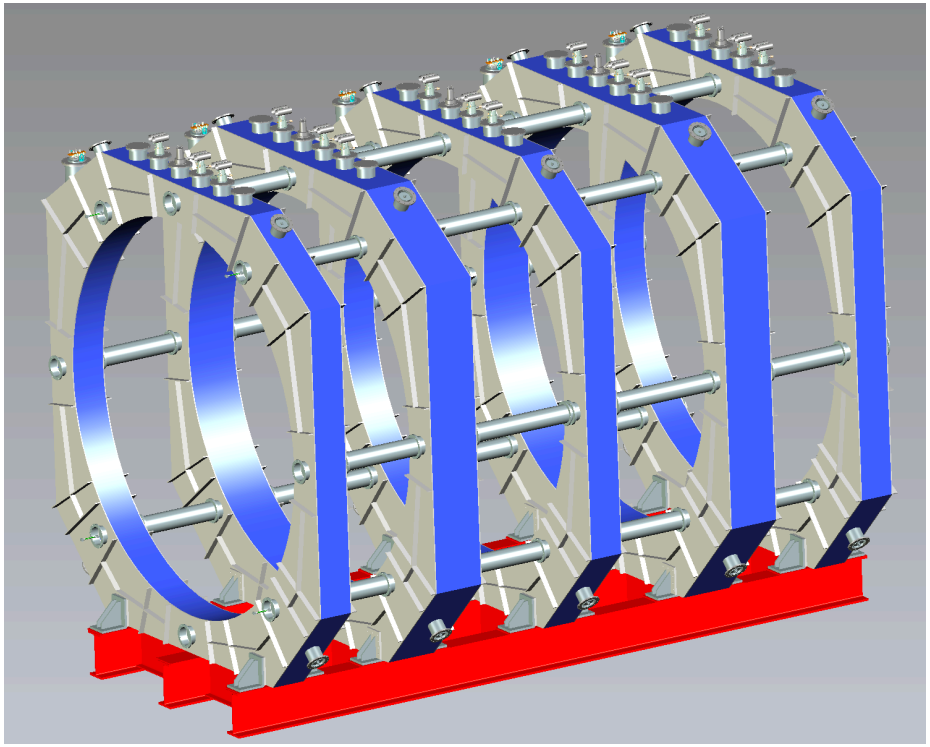

Reference design

More on this, this afternoon

- Reference Design
  - 5-Coil Helmholtz
    - Overarching requirements
      - Large acceptance for particles leaving LAr
      - Present minimal mass
  - Central field = 0.5T
- Side coils at 2.5 m, shielding coils placed at 5 m from the magnet center in Z.
  - All coils have the same inner radius 3.5 m and outer radius 3.59 m.
  - Center and shielding coils are identical.
- Design very mature
- Now moving to alternate designs

Magnet Reference Design (CC-option)

Running off cryo-coolers still a possibility.

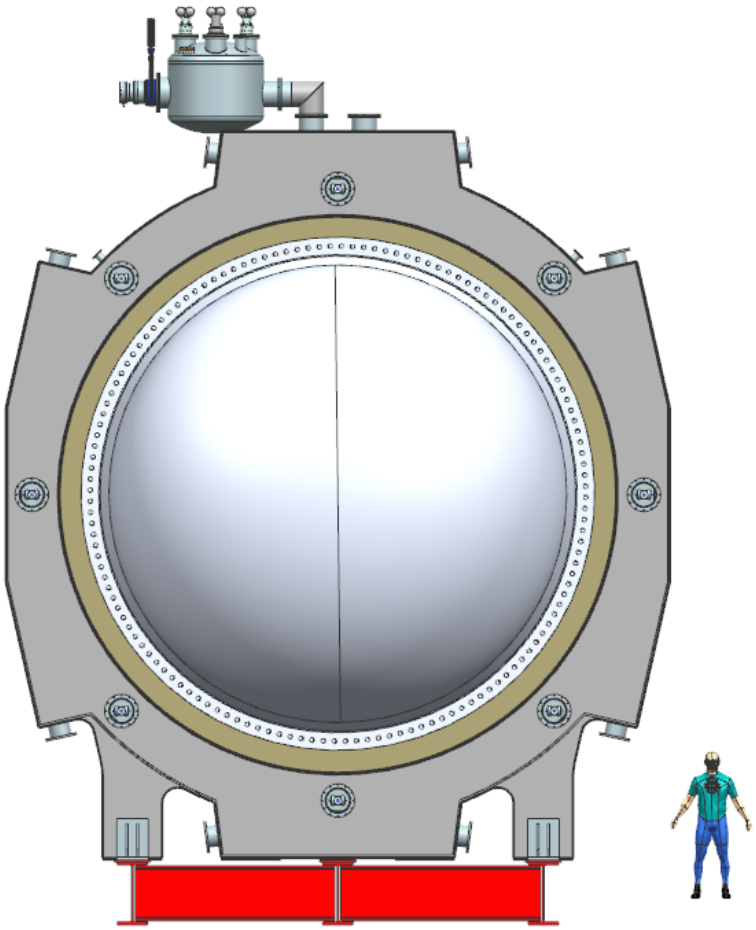

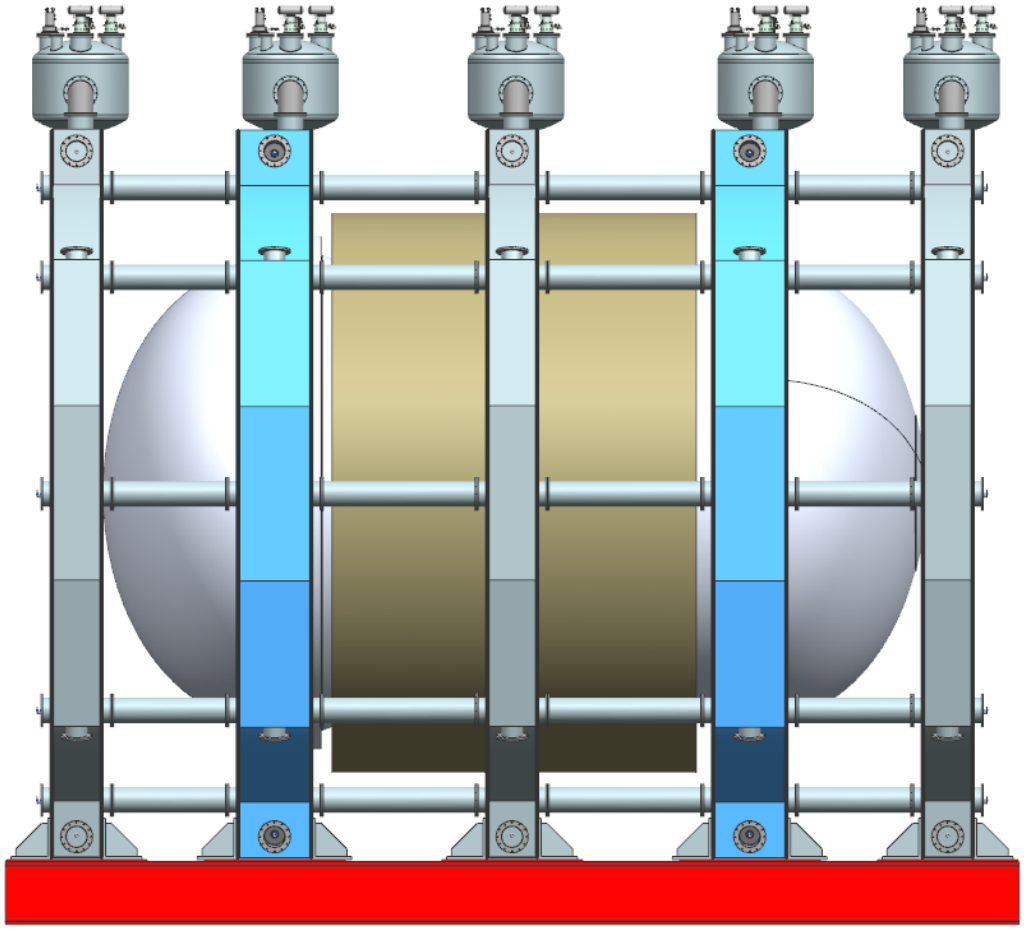

Magnet Options

- At the DESY WS, it was decided to freeze the reference design in its current form and move onto alternate designs
- Motivation
  - Save space along beam direction
    - 8.4m ➛ ~ 7.5m
    - Reduce cost
- Taking two forward
  - 2-coil Helmholtz design with partial return yoke (PRY)
  - Solenoid with PRY (SPY)
- In both stored E ~ 40% of reference design
  - Remember Cost ~ $(E)^{0.8}$

Solenoid with Partial Yoke (SPY)

- New concept from INFN
- Solenoid with a "window" in the yoke
  - closing the magnetic circuit with iron
  - does not affect particles
- Good for
  - reducing stray field
  - reducing stored energy
  - having uniform material budget
    - May be important for DUNE PRISM
- Bad for
  - heavier
  - ~10cm of aluminum along particles path (outside the calorimeter)

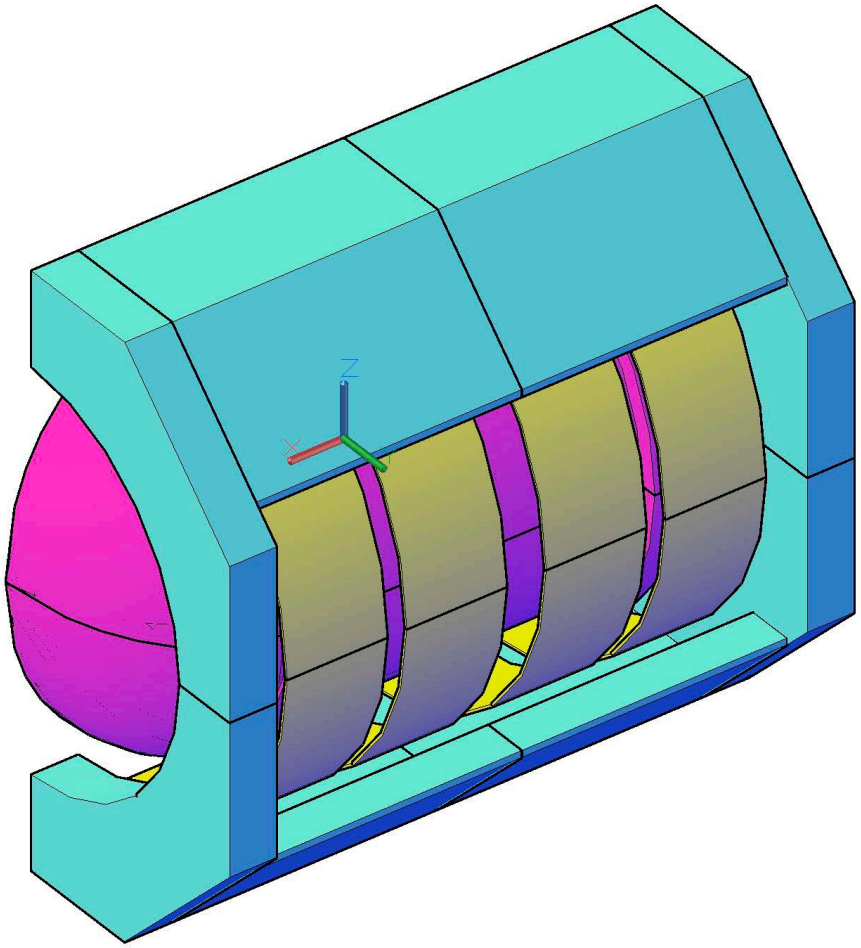

Andrea Bersani, INFN Genoa

SPY features

- Field on TPC: 0.51 T ± 12%
  - 0.51 T ± 8% on ~90% of the TPC
- Stored energy: 44 MJ
- Current density: 32 A/mm^2
- Possible cable: 20 x 11 mm^2
- Total length: ~12.7 km
- Current: 7040 A
- Inductance: 1.8 H

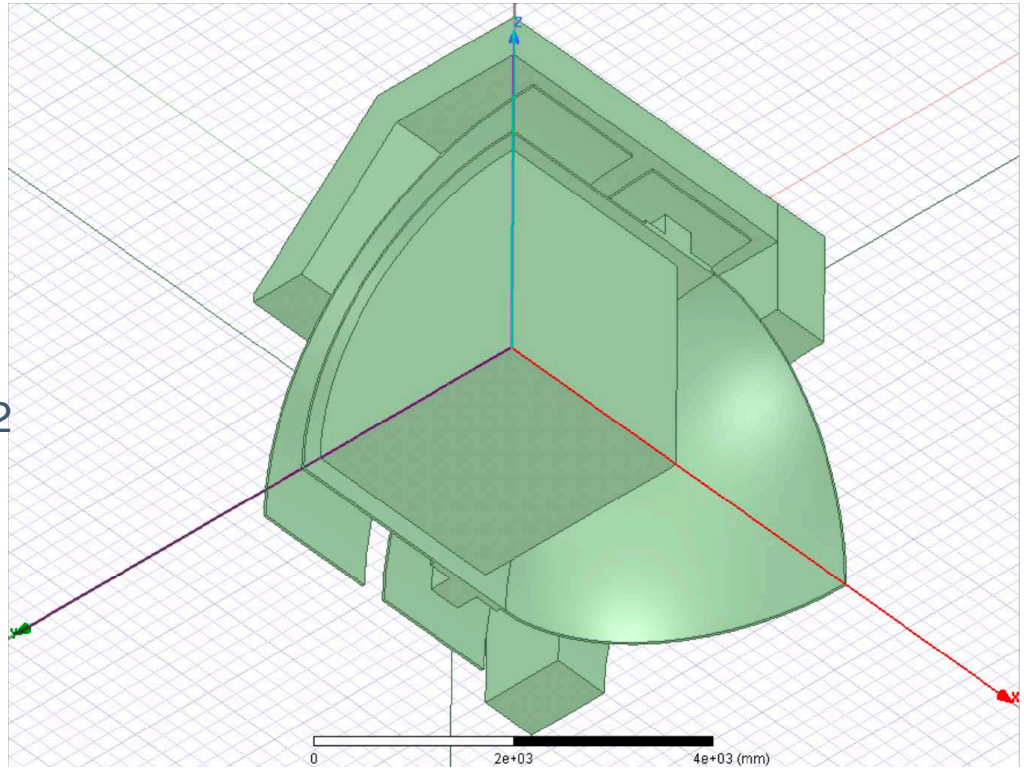

Moving forward on MPD magnet

- Need physics guidance
  - Acceptability of field non-uniformity
  - Amount of dead material (PRY) that is acceptable
  - Is stray-field in LAr good or bad?
- Need detailed PRY design
  - Integration with μ tagging system
  - support structure
  - moving platform
  - services and supplies integration
- Try to utilize same PRY design for SPY and Helmholtz coils design(s)

Initial study on PRY for SPY

Andrea Bersani

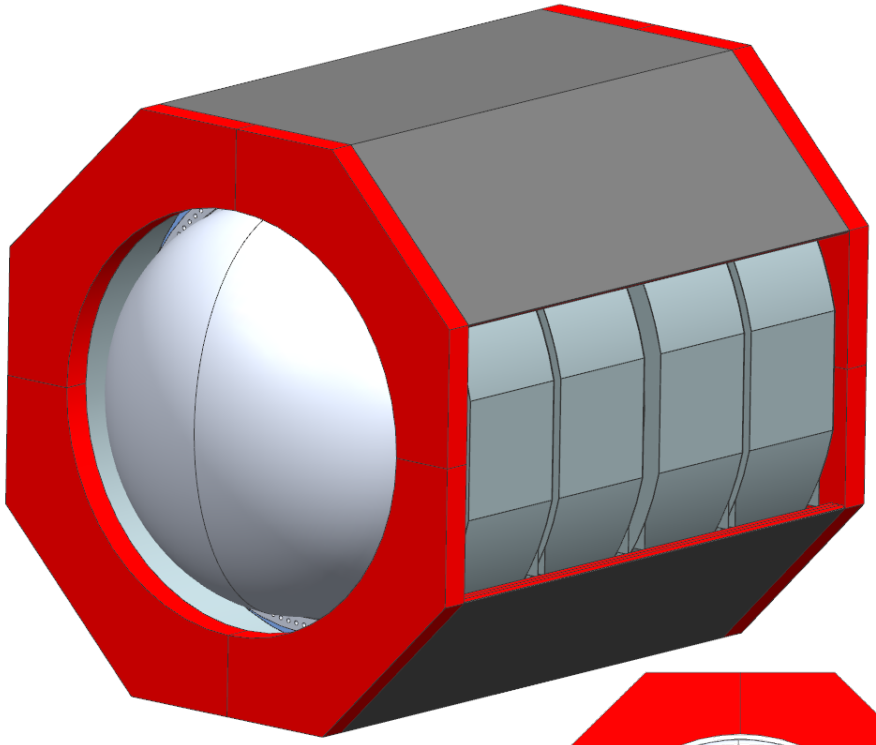

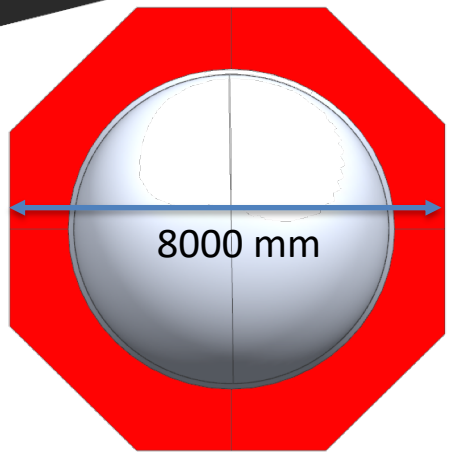

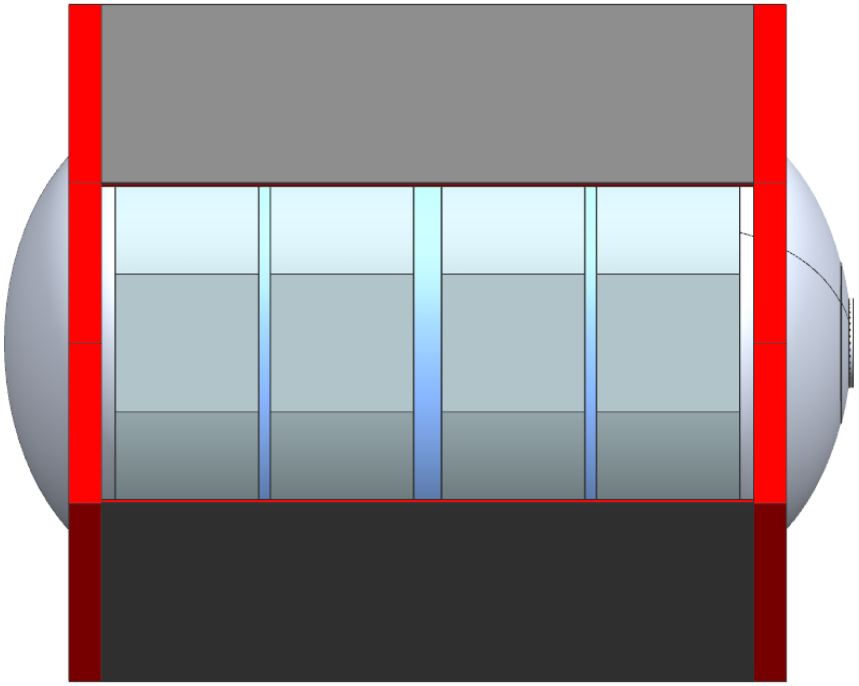

μ system: Design detail

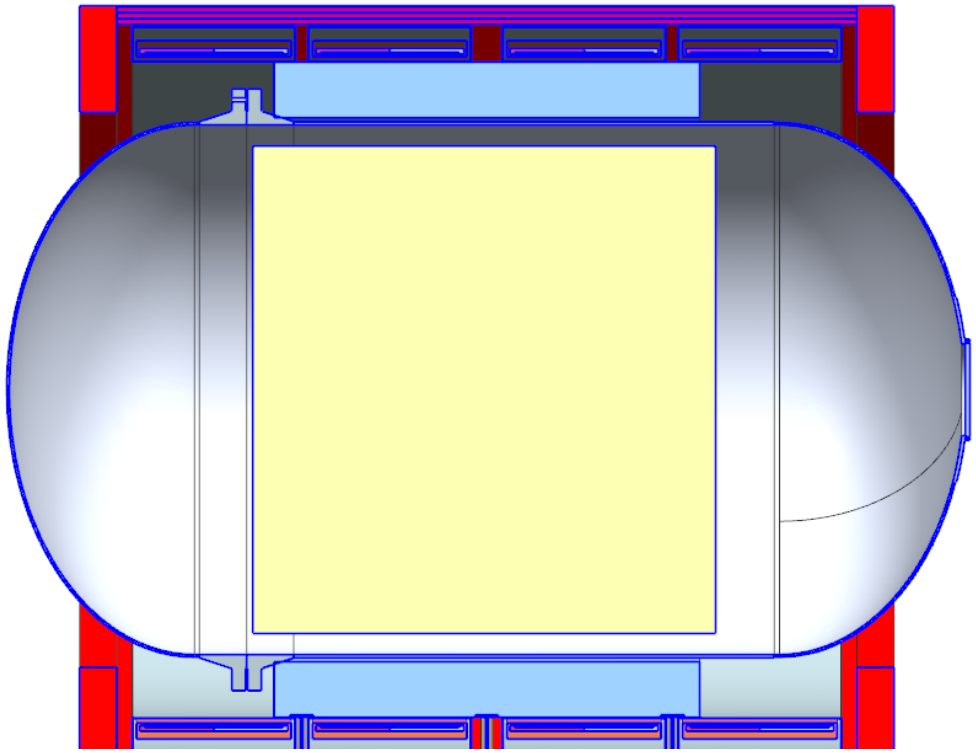

Don Mitchell

- 50 mm steel, x3
- 16.667 mm gaps for scintillator

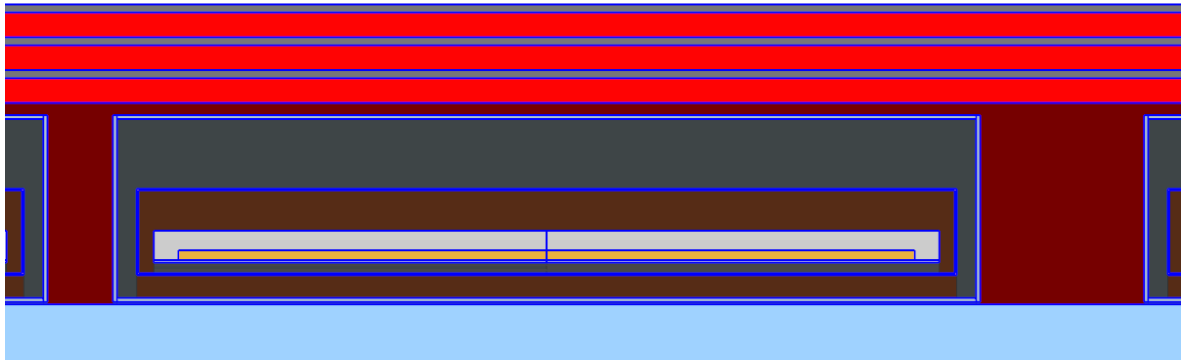

Muon catcher -- Simulation

Chris Marshall

- Design is obviously coupled to that of ECAL and magnet
- Preliminary study with 20 cm Fe. Some conclusions
  - Muons and pions stopping in ECAL can be separated by range with nearly 100% efficiency
  - μID is required to get right-sign CC purity above 95%
  - 20cm iron μID gets ~100% purity for high-momentum tracks
  - Backward μID is not needed if there is a backward ECAL
  - Increasing the number of ECAL layers would improve the purity in the 400-500 MeV/c momentum range
- Detailed design needs to begin

FHC ν_μCC purity (μ^-/π^-)

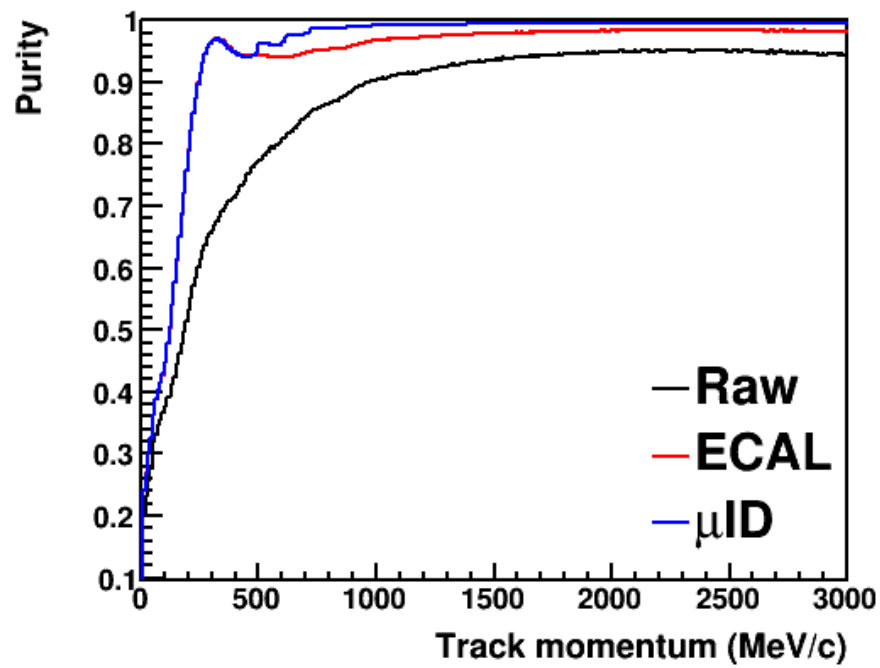

Note: Raw ≡ Select highest P track from μs and πs

GArSoft

Tom Junk, Leo Bellatoni, Eldwan Brianne

- There has been significant progress in the GArSoft tracking simulation software for the high-pressure gas TPC (HPgTPC). The following functionality has been implemented:
  - GENIE, CRY, radiologicals, text-file generators
  - GEANT4 interactions in gas and calorimeter – fairly detailed geometry
  - ArSoft-style drift, attachment, diffusion simulation. Each electron is drifted separately (as ALICE does). LArSoft groups them together to speed calcs. Transverse diffusion: 1.6 mm sigma at a drift of 1 m.
  - Pad-response functions
  - Digitization and zero-suppression of raw waveforms

Three students from Ukraine joining effort

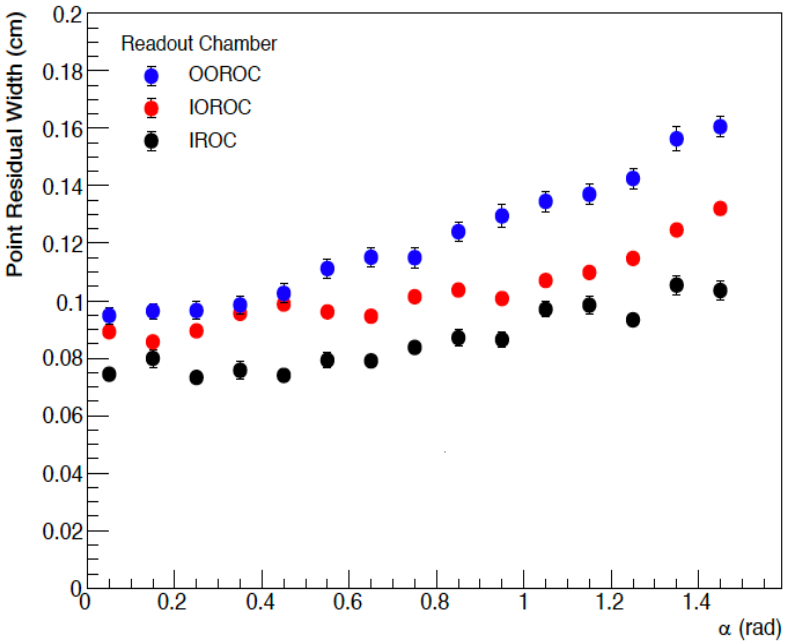

Point-set resolution study. Optimization of the TPC Clustering algorithm is expected to improve all resolutions.

A Simulated and Reconstructed ν_e Charged Current Event in the HPgTPC

ν_e + Ar → e- + π+ + p + n

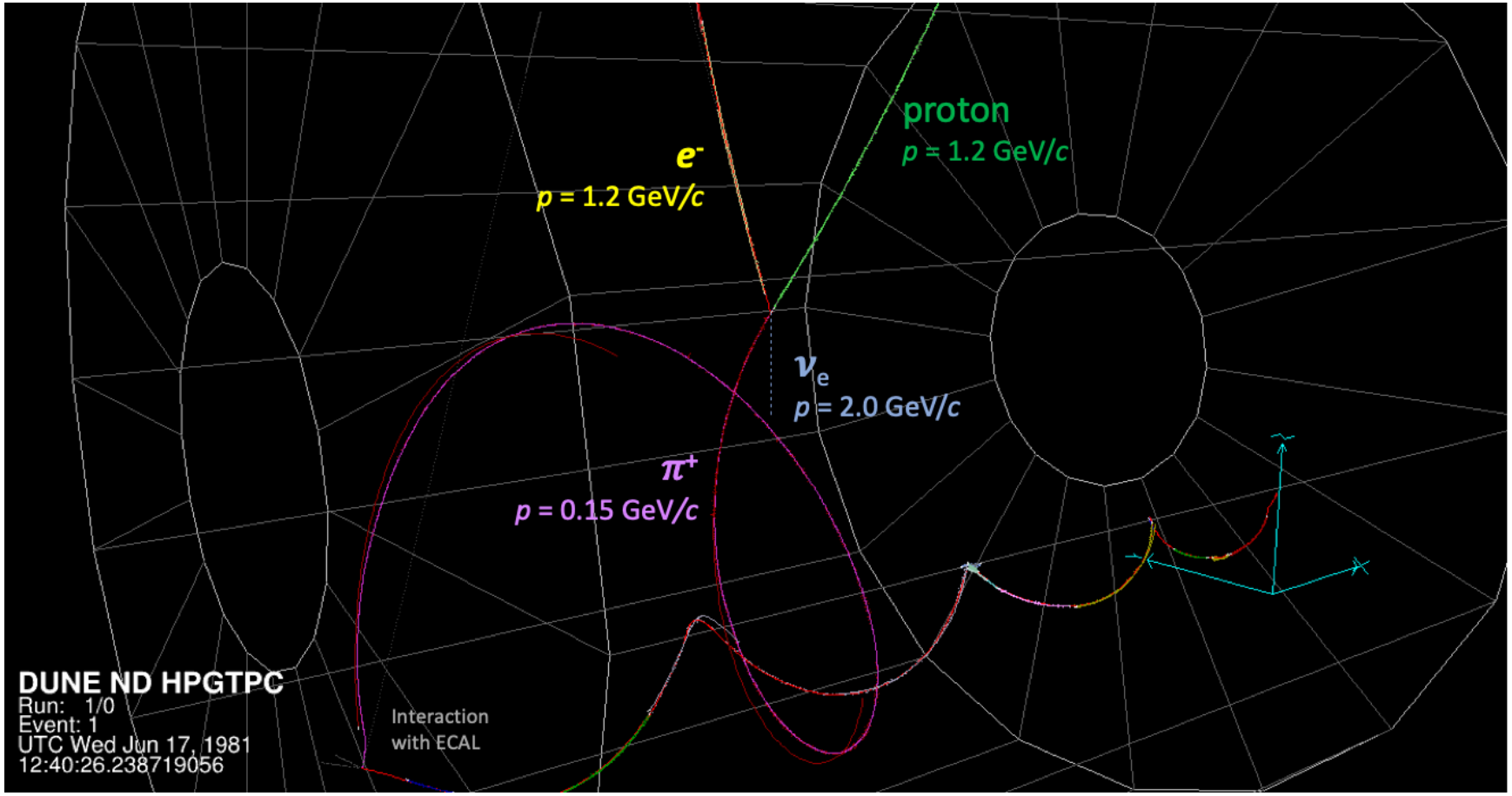

Neutron with p = 0.23 GeV/c at the P.V. not shown

GArSoft to do list (more from Eldwan tomorrow)

- Lots of good progress recently on pad response functions, cathode-crossing tracks, track-ecal matching (no plots for latter)
- Many opportunities to improve modeling and reconstruction algorithms
  - Waveform modeling – noise and signal shape
  - dE/dx simulation and reco
  - TPC cluster improvements and characterization
  - Pattern recognition in dense environments and low-energy loopers
  - Vertexing improvements
  - ECAL clustering improvments
  - use TPC/ECAL associations for PID, event slicing, analysis

MPD event simulation studies

- Event Overlay production
  - Generate full-spill samples of interactions in HPgTPC, ECAL, magnet, Fe, rock, LAr
- ν_μCC multi-pion exclusives
- Coherent $\pi^\pm$ full-simulation analysis
- ν_eCC analysis
  - π^0 background rejection study
- Transverse variable analysis
  - νH interactions in CH_4 mixtures

MPD multi-pion final states

Seb Jones

- The unique features of the HPgTPC, especially in areas such as PID allow it to separate out exclusive final states
- This in turn, should allow us to identify and (hopefully) fix problems with our interaction model
- Additionally, show that the magnetic field in the HPgTPC can be used to identify issues our interaction model
- Regarding LAr:
  - On average the reconstructed energy is off from the true neutrino energy by about $2m_\pi$ due to the limited PID capabilities of the LAr

MPD multi-pion final states

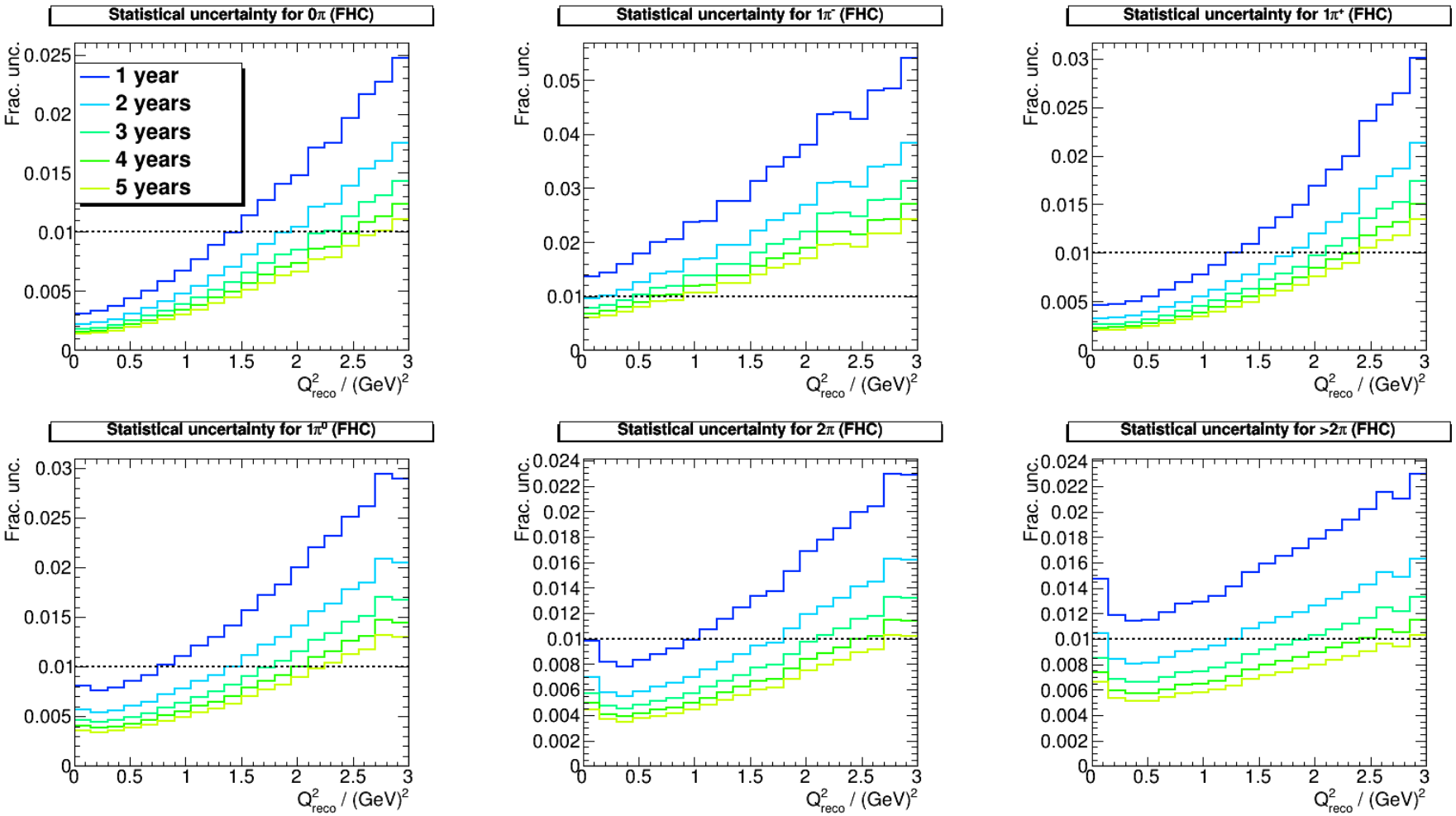

Preliminary

MPD multi-pion final states III

- The excellent PID capabilities of the HPgTPC allow it to determine exclusive final states highly accurately
  - If there are problems with our interaction model that manifest themselves in differing final state kinematics, the HPgTPC will be well placed to spot them
- It should be possible to use this information to correct our interaction model at the FD
- Short-term goal: Show that we can use the information in the HPgTPC to actively reduce our δ_{CP} bias

Neutrino-Hydrogen Interactions

Xianguo Lu, Oxford

- Many gases can be used i the HPgTPC (P10 reference)

Z-Y Projection: Sample event - ν_μCC

Test event

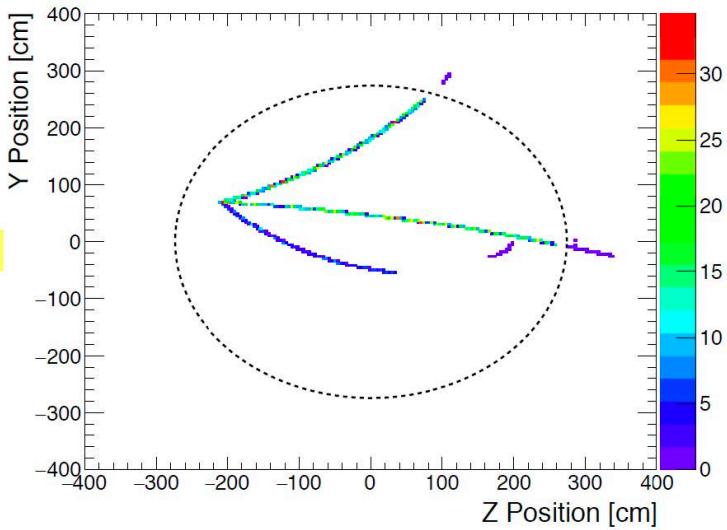

Name	Formula	Signal rate	Background rate	S/B
pure hydrogen	H_2	1 (ref.)	-	-
polystyrene (solid)	(C_8H_8)n or CH	-	-	0.17
P-10	90% Ar + 10% CH_4	0.2	8.4	0.02
P-50	50% Ar + 50% CH_4	1	6	0.17
helium-methane (50:50)	50% He + 50% CH_4	1	2	0.5
helium-ethane (50:50)	50% He + 50% C_2H_6	1.5	3.5	0.43

- State-of-the-art tracking resolution in gas TPCs
  - ALICE TPC ~1% at 1 GeV/c
    - 10 times better than T2K
    - →S/B = 8 on CH target
- DUNE Near Detector
  - High Pressure gas TPC can achieve 95% νH purity with 50% He + 50% CH_4 (24 S:B?)

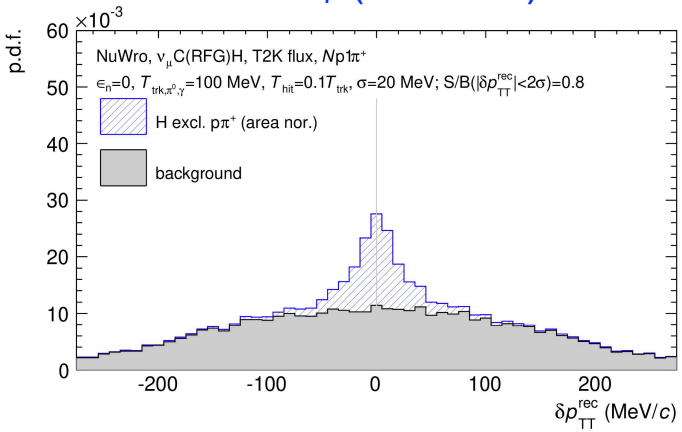

A word on neutrons

- Conclusions from DESY WS
  - Neutron reconstruction from TOF is possible in MPD ECAL, with ~40% efficiency and ~40% (50%) purity in FHC (RHC) mode
  - Can further improve purity by looking at forward events only, or looking at leading neutron only, up to ~60-70%
  - But energy resolution is poor, and biased toward low neutron KE, primarily due to missing the initial neutron interaction
    - This could be improved by reducing the passive fraction, or by adding a (10s cm) fully-active inner ECAL

Neutron efficiency

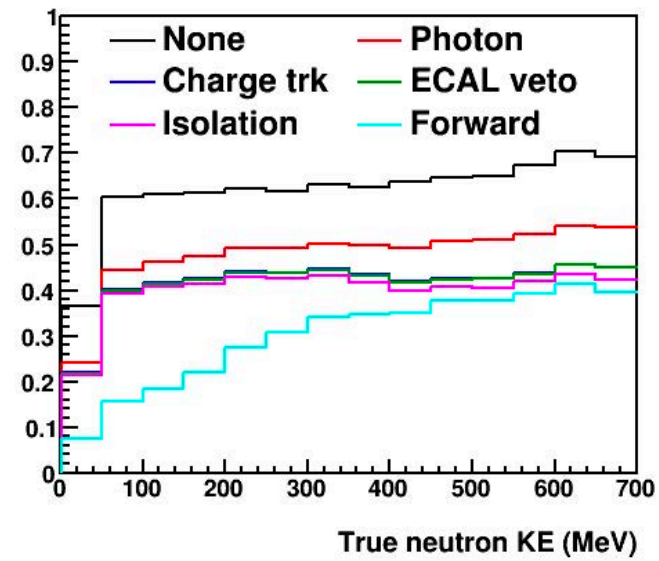

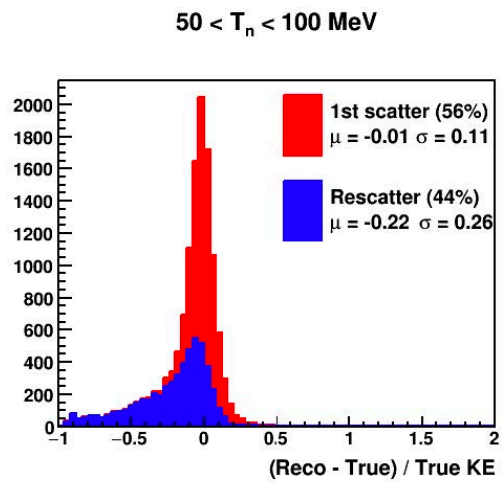

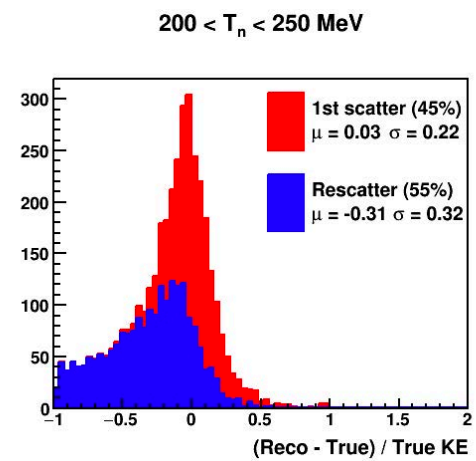

Conclusions

- The MPD design is maturing
  - HPgTPC design is very far advanced
  - Pressure Vessel at BARC is nearing TDR level of detail
  - ECAL is far advanced
  - Magnet design
    - Reference design is at CDR level of maturity
    - Hope to bring alternate designs to that level in near future
  - Muon tagger effort just beginning
  - Software and simulation effort ongoing and much left to do
- ***Overall, recent work has shown that the MPD will be an extremely capable detector which will add unique functionality to the DUNE ND complex***

Conclusions – Indian participation

- The team at BARC is already fully engaged in the HPgTPC and magnet system designs
- An integrated approach from the Indian institutions will make a tremendous impact on the MPD
  - HPgTPC
  - Magnet and μ tagging systems
  - Software development
  - Physics simulation
- An important and crucial Indian contribution to DUNE with great impact and visibility

Questions?